RESISTANCE TYPES

MEA resistance type

Description:

Handy, dipping, resistance temperature sensor, with heat-radiation protector.

Temperature: -200…+600ºC, -50…+400ºC

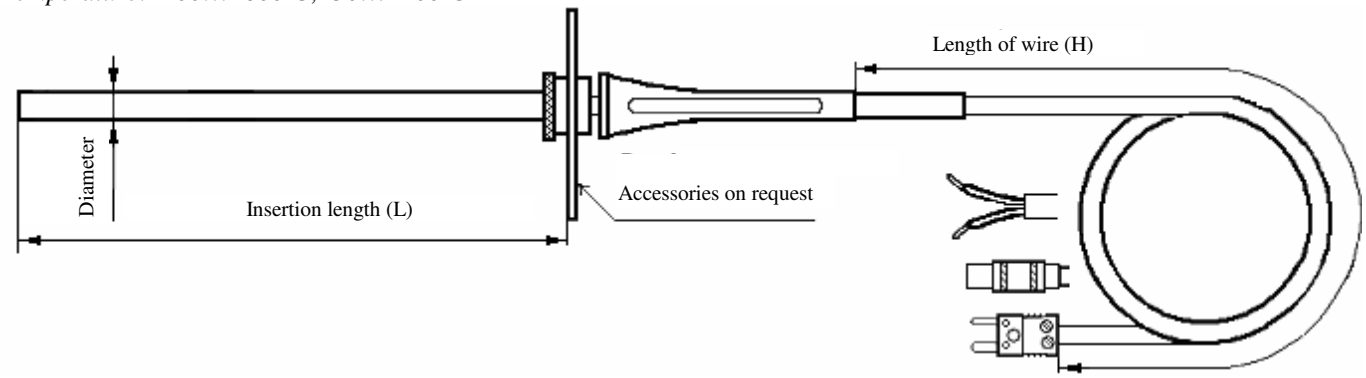

Ordering code:

| M | E | A | | | | | | | | | | | | |

MEASURING-ELEMENT:

Type of resistance:	*Pt100*	1
	Other	9
Class of accuracy:	*A*	A
	B	B
	Other	9
Construction:	*Single*	1
	Double	2
	Triple	3
Connection:	*2 wire*	2
	3 wire	3
	4 wire	4
Measuring range:	*-200…+600º C*	1
	-50…+400º C	2

THERMOWELL, BINDING:

Material of thermowell:	*1.4301*	1
	1.4541	2
	Other	9
Diameter of thermowell [mm]:	*4*	4
	6	6
	Other	9

Length of thermowell [mm]:

WIRE:

Exterior material of wire

PVC 105ºC	Silicon *180 ºC*	Teflon *250 ºC*	Fiber-glass *400 ºC*	Other
1	**2**	**3**	**4**	**9**

Shield of wire

Non	Exterior	Interior
0	**1**	**2**

Length of wire:

H (mm)

ACCESSORIES ON REQUEST

Heat-radiation protector:	Not order	0
	Order	1

Naturally, we can differ from the above construction.

Please, fill in the ordering code and send your enquiry (order) to us.

fax: 00-36-1-282-6135 , e-mail: ugyfelsz@rhodium.hu , We will discuss the details.

If you have question, please call: 00-36-1-282-5689 and 00-36-1-282-8308, Our customer service is available